Liberty International Insurance Limited
Suites 2601-04 & 2607-16, 26/F
1111 King's Road, Taikoo Shing
Hong Kong
Tel: (852) 2892 3888
Fax: (852) 2577 9578
libertyinternational.com/hk

Claim Form – Motor Vehicle Accident
汽車意外報告書

Claim Procedures - Motor Insurance 車輛保險之一般索償程序

1. If you are involved in a traffic incident or your vehicle is being stolen, you should report to the police immediately.
   如閣下涉及交通事故或受保車輛遭受盜竊，應盡快通知警方。
2. Note down the essential information of the third party(ies) involved, such as
   應記下第三者之重要資料，例如：
   - Vehicle registration number(s) of the vehicle(s) involved; 被牽涉之車輛的車牌號碼
   - Name(s) and address(es) of the driver(s) involved; 被牽涉之司機的姓名及地址；
   - Name of insurance company(ies) and their policy number(s) of the vehicle(s) involved; 被牽涉之車輛的保險公司名稱及其保單號碼
   - Personal particulars of the injured person(s) involved; 被牽涉之傷者的個人資料；
   - Extent of injury of the injured person(s) involved; 被牽涉之傷者的傷勢；
   - Police reporting case number. 警方之報案號碼。
3. To protect your own interest, lodge a compliant to the police within ten days if the incident was caused by the negligence of the third party(ies).
   為保障閣下之權益，如此事故是由於第三者疏忽所導致，應於十日內正式向警方提出投訴。
4. Do not make any written or verbal agreement with the third party(ies) because it may discharge them from responsibility and you may sign away your right of recovery.
   切勿與第三者簽署或達成任何口頭協議，此舉可能導致對方擺脫在此事故中之責任及有可能令閣下喪失追討權利。
5. No admission of liability or offer of settlement should be made without our consent.
   即使閣下認為此事故有可能是由於閣下疏忽所致，也不能向對方承認責任或同意作出賠償。
6. Complete the attached Motor Claim Form, Application for Certificate Relating to Previous Conviction, and all Letter of Authorization and send us together with copy of all the requested documents as follow:-
   閣下須填妥附上之車輛索償表、過往定罪事項證明書及所有同意書連同下列証明文件副本寄回本公司辦理：-
   - Vehicle Registration Document of the Insured Vehicle 受保車輛登記文件;
   - Police Report Number and Intended Prosecution Notice from the Police
     警署報案編號紙及有關擬控告通知書
   - Drink Driving Procedure Form (Screening Test) issued by the Police
     香港警務處處理酒後駕駛程序表格(呼氣測試)證明
   - Statement to the Police from Insured Driver and/ or Insured and all other relevant documents 警方口供及所有有關部門發出的文件
   - Driving License and ID Card or all relevant Identity Documents of the Insured Driver
     司機駕駛執照及其他身份証明文件，例如身份証或護照。
7. All correspondence in relation to the incident must be unanswered and forwarded to our Company immediately.
   所有有關此事故之文件應不予回應，並即時轉交本公司處理。

Claim Form – Motor Vehicle Accident
汽車意外報告書

Important 重要事項:
1. No liability is admitted by issuing this form 此表僅供審核之用未能視作承擔責任之根據 2. Insured is requested to answer all questions fully in order to avoid unnecessary delay in the settlement of claim and delete the inapplicable item (N.A.) 填報此表務須詳盡以免阻延及將不適當項目刪去(N.A.) 3. Insured is requested to forward to the Company all communications, or copies thereof, which you or the driver may receive from the police and/ or third party in connection with this accident 受保人或司機如收到警署或第三方面之函件請即寄交本公司 4. Please submit copy of the driver's Driving License, Identity Card and Hong Kong Vehicle Registration Document 請附上司機之駕駛執照、身份証及香港受保汽車登記文件副本 5. An estimate of repair cost must be submitted to the Company for approval before repairs are commenced 估價單必需先交本公司審查及批核方得開工修理 6. This claim form and the requisite documents (on item 4) together with all Letter of Consent must be submitted to the Company for reference within 14 days after the accident 上述第四項之文件及此報告書連所有同意書必須於意外發生後 14 天內呈交敝公司審閱

Particulars of Insured 受保人資料

Policy no. 保單號碼 _____	Period of Insurance 保險期 From 由 _____ To 至 _____
Name 受保人姓名 _____	
Address 地址 _____	
Home no. 住宅電話 _____	Mobile no.流動電話 _____
Office no. 辦公室電話 _____	Occupation 職業/行業 _____

Claim Form – Motor Vehicle Accident
汽車意外報告書

Particulars of Driver 司機資料

Name 姓名 _____	Occupation 職業/行業 _____
Address 地址 _____	
Date of Birth 出生日期 _____	Driving License no. 駕駛執照號碼 _____
Date of the first driving license issued 首次獲發駕駛執照日期 (DD/MMM/YYYY) _____	Place of Issue 簽發地區 _____
Office no. 辦公室電話 _____	Home no.住宅電話 _____
Mobile no. 流動電話 _____	Email 電郵 _____
What is your relationship with the Insured? 受保人與司機的關係 ☐ Same person 屬同一人 ☐ Relative or friend 親屬或朋友 ☐ Hirer or Borrower 出租或借用	☐ Employer or Employee 僱主/僱員 ☐ Others (please state) 其他(請詳述) _____
Was the Driver driving the insured vehicle on the order or permission of the Insured? 司機是否得受保人之許可駕駛肇事之受保汽車?	☐ Yes 是 ☐ No 否
Was the Driver sober and competent to drive at the time of Accident? 司機是否清醒及勝任駕駛?	☐ Yes 是 ☐ No 否
Has the involved driver been previously involved in any other traffic accident, or been convicted of any driving offences during the past 5 years? If "Yes", please give details. 司機曾否於過去的五年內涉及其他車禍或被警方交通部檢控? 如有，請詳述。	☐ Yes 是 ☐ No 否

Claim Form – Motor Vehicle Accident
汽車意外報告書

Particulars of Reporting to Police 報案資料

Did anyone report to the Police? 是否已向警方報案?	☐ Yes 是 ☐ No 否
Name of Police Station 警署名稱 _____	Police report no.報案編號 _____
Reason of report 報案原因 ☐ Record purpose only 只作紀錄存檔 ☐ Complaint against parties concerned 投訴有關人士	
Is the Driver released on bail? 肇事司機是否獲准保釋? ☐ Yes 是 ☐ No 否 ☐ Not Applicable 不適用	
If yes, please provide us the date of reporting to the Police. 如是，請提供指定向警署報到日期及時間。 _____	

Particulars of Insured Vehicle Concerned in Accident 肇事受保汽車之詳情

Registration no. 車牌號碼 _____	Make & Model 受保汽車名稱及款式 _____
Year of Manufacturer 受保汽車製造年份 _____	Cubic Capacity 汽缸容量 _____
For what purpose was the vehicle being used at the time of accident? 事件發生時該受保汽車是用作何用途? ☐ Social Domestic & Pleasure 社交家庭/娛樂 ☐ Insured's Business or Profession 受保人業務 ☐ Hire or Reward 供出租或以報酬式借予他人 ☐ Parking 停泊	☐ Towing 拖運 ☐ Motor Trade 受保汽車修理及買賣 ☐ Other Purpose (please give details) 其他用途(請詳述) _____
Extent of damage of the vehicle 受保之受保汽車損毀程度 ☐ Minor 輕微 ☐ Normal 一般 ☐ Serious 嚴重	

Claim Form – Motor Vehicle Accident
汽車意外報告書

Particulars of Insured Vehicle Concerned in Accident 肇事受保汽車之詳情

Please mark the damaged area(s) of the vehicle at the diagram below

請於下列圖案上劃出受保汽車之損毀地方

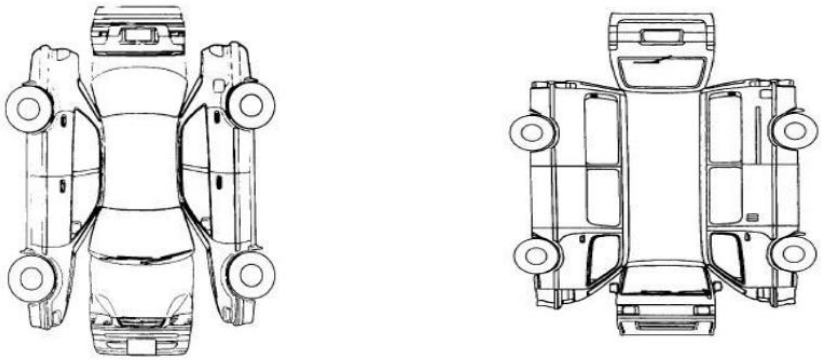

If the policy is comprehensive cover, please advise if you wish to claim own damage under the Policy.

若購有綜合保險，是否擬於本公司賠償台端汽車之損毀

☐ Yes 是 No 否

What is the name and contact no of the repairer? 維修車廠之名稱及聯絡電話

Please attach the repairer's estimate if obtained 請附上持有的估價單

Was the vehicle in a safe and roadworthy condition?
肇事時受保汽車的機件是否妥當? ☐ Yes 是 ☐ No 否

Claim Form – Motor Vehicle Accident
汽車意外報告書

Particulars of Accident 意外詳情

Date of Accident 肇事日期	Time 時間
_____	_____

Estimated speed of the vehicle at time of incident 肇事時估計之車速 KM/H 公里/每小時

Weather conditions 天氣情況

- ☐ Fine 晴天
- ☐ Rainy 雨天
- ☐ Thunder/ Lightning 雷電
- ☐ Typhoon 颱風
- ☐ Rainstorm 暴雨
- ☐ Foggy 大霧

Condition of the road surface 路面情況

- ☐ Dry 乾爽
- ☐ Smooth 平滑
- ☐ Wet 濕滑
- ☐ Rough 崎嶇
- ☐ Flooded 水浸
- ☐ Oily 滿佈油污
- ☐ Steep 陡峭

Place of the incident occur 肇事地點

_____

Lighting 光線

- ☐ Day light 日間
- ☐ Dusk 黃昏
- ☐ Night 夜間
- ☐ Street light on 街燈亮着
- ☐ Insufficient lighting 街燈未亮

How did the incident occur? (Please give details) 請詳述意外情形

_____

_____

_____

_____

_____

Incident explanatory sketch (please indicate the direction of vehicles at the time of the incident)
請作圖解顯示遇事地點並指出有關受保汽車及行人位置另以箭咀顯示行駛方向

Claim Form – Motor Vehicle Accident
汽車意外報告書

Particulars of Witnesses 見證人資料

Witness 1 見證人 1

Name 姓名	Contact no. 聯絡電話	☐ Passenger 乘客	☐ Independent Witness 獨立証人
_____	_____		
Address 地址 _____			

Witness 2 見證人 2

Name 姓名	Contact no. 聯絡電話	☐ Passenger 乘客	☐ Independent Witness 獨立証人
_____	_____		
Address 地址 _____			

Witness 3 見證人 3

Name 姓名	Contact no. 聯絡電話	☐ Passenger 乘客	☐ Independent Witness 獨立証人
_____	_____		
Address 地址 _____			

Witness 4 見證人 4

Name 姓名	Contact no. 聯絡電話	☐ Passenger 乘客	☐ Independent Witness 獨立証人
_____	_____		
Address 地址 _____			

Witness 5 見證人 5

Name 姓名	Contact no. 聯絡電話	☐ Passenger 乘客	☐ Independent Witness 獨立証人
_____	_____		
Address 地址 _____			

Witness 6 見證人 6

Name 姓名	Contact no. 聯絡電話	☐ Passenger 乘客	☐ Independent Witness 獨立証人
_____	_____		
Address 地址 _____			

Claim Form – Motor Vehicle Accident
汽車意外報告書

Particulars of Injury(ies) 傷者資料

Was/Were there any person(s) injured in the accident? 是次事件是否牽涉人身傷亡?	☐ Yes 是 ☐ No 否
If "Yes", please state the total number of injured person 如 "是" 請敘述傷者或死者之人數	_____
Please state the details of the injured person(s) involved in the incident. 請敘述是次事件所有牽涉之傷者資料	

Injury 1 傷者 1

Name 姓名	Contact no. 聯絡電話	Sex 性別	Age 年齡
_____	_____	☐ M 男 ☐ F 女	_____

Nature of Injury 傷者傷勢

☐ Slight 輕傷 ☐ Serious 嚴重 ☐ Death 死亡

Please describe the extent of injury and part of body injured 請詳述受傷情況及部位

_____

Conscious 是否清醒

☐ Yes 是 ☐ No 否 ☐ Unknown 不詳

Carried by the Stretcher to the ambulance 是否須用擔架抬上救護車

☐ Yes 是 ☐ No 否 ☐ Unknown 不詳

Identity of the Injured 傷者身份

☐ Insured's vehicle Passenger 受保汽車乘客

☐ Third party vehicle passenger/driver/pedestrian 第三者汽車之乘客/司機/途人

Injury 2 傷者 2

Name 姓名	Contact no. 聯絡電話	Sex 性別	Age 年齡
_____	_____	☐ M 男 ☐ F 女	_____

Nature of Injury 傷者傷勢

☐ Slight 輕傷 ☐ Serious 嚴重 ☐ Death 死亡

Please describe the extent of injury and part of body injured 請詳述受傷情況及部位

_____

Conscious 是否清醒

☐ Yes 是 ☐ No 否 ☐ Unknown 不詳

Carried by the Stretcher to the ambulance 是否須用擔架抬上救護車

☐ Yes 是 ☐ No 否 ☐ Unknown 不詳

Identity of the Injured 傷者身份

☐ Insured's vehicle Passenger 受保汽車乘客

☐ Third party vehicle passenger/driver/pedestrian 第三者汽車之乘客/司機/途人

Claim Form – Motor Vehicle Accident
汽車意外報告書

Particulars of Injury(ies) 事件涉及之第三者詳情

Was/ Were there any other vehicle(s) involved in the incident? 是次事件是否牽涉其他汽車? If "Yes", please state the total number of vehicle(s) involved 如 "是"，請敍述被牽涉之汽車數目。Number of Vehicles:	☐ Yes 是	☐ No 否 _____
Please state the details of the injured person(s) involved in the incident. 請敍述是次事件所有牽涉之傷者資料		
Third party registration no. 第三者車牌號碼 _____	Year, Make & Model 汽車年份、牌子及型號 _____	
Name of third party driver 第三者司機姓名 _____	Contact of third party driver 第三者司機聯絡資料 _____	
Brief details of damage 簡述損毀情況 _____		
In your opinion, who should be held responsible for the incident? 依閣下所見，該事件是那一方面的責任? ☐ Myself/ Person who was driving my car 本人/駕駛受保汽車之司機 ☐ Driver of vehicle(s) _____ (Registration No.) _____(車牌號碼)之司機 ☐ Other (please state) 其他 (請詳述)		
Other than damage to vehicle(s), was any other third party property damaged? 除受保汽車外，是次事件是否牽涉其他第三者之財物損毀?		
☐ Yes 是	☐ No 否	
If "Yes", please state: 如 "是" 請詳述。 _____ _____		

Statement of Truth/ 真實聲明

I/ We confirm that I/ we have read and fully understand the Purpose of Collection of my personal data. I/ We agree to the transfer to my data to the relevant parties as stated in the section of Transfer of personal Data. 本人/吾等確認已閱讀，並清楚明白收集本人/吾等個人資料之目的。本人/吾等同意利寶國際保險有限公司，將本人/吾等的個人資料，根據"個人資料轉交" 一項所列，移交予有關人仕。 I believe that the facts stated in this Motor Vehicle Accident Claim Form are true and the opinion expressed in itis honestly held. 本人相信本汽車意外報告書所述事實屬實，而其中所表達的意見屬真誠地持有的。	
Insured's Signature 受保人簽名 (with company chop if applicable) (若以公司名義投保，請附加公司蓋印)	Driver's Signature 司機簽名
Date 日期:	Date 日期:

Your Ref 貴處檔案編號:

Our Ref: 本司檔案編號:

Letter of Consent 同意書

Incident on 事故日期:

Involving vehicle 牽涉車輛:

I, _____ , consent to the relevant party(ies) releasing all my relevant documents and information, including but not limited to my statement, personal data, sketches, MVE Report, brief facts and notes of proceeding in relation to the captioned incident to Liberty International Insurance Limited.

I confirm that the copy of this Consent has the same effect as the original.

本人，_____，現同意有關部門就有關於上述事件提供(包括但並不限於)本人之口供、個人資料，草圖、車輛檢驗報告，案情簡介及審判過程給予利寶國際保險有限公司。

本人確定同意書的副本，與正本擁有同樣效力。

_____

Signature of driver/involved part(ies) 司機簽署/事主簽署

_____

I.D.Card No./Passport No.身份証號碼/護照號碼

Claim Form – Motor Vehicle Accident
汽車意外報告書

To: Liberty International Insurance Limited
Suites 2601-04 & 2607-16, 26/F
1111 King's Road, Taikoo Shing
Hong Kong

Policy No.	保單號碼:
Vehicle Registration No	車牌號碼:
Date of Traffic Accident	意外日期:

Declaration of Driver 司機之聲明

1. Has the Subject Vehicle been detained by the Police for examination after the accident? 意外後，上述受保汽車是否被警方扣留驗車？ If the answer is Yes, please attach a copy of the detention note issued by the Police. 如有，請附上警方發出的扣車文件副本。	☐ Yes 是 ☐ No 否
2. Has the Driver been demanded by the Police for a screening breath test, additional breath, blood or urine test for alcohol level? 肇事司機是否被警方要求進行呼氣測試、進一步呼氣測試、血液或尿液檢驗？ If the answer is Yes, please declare whether the Driver has exceeded the prescribed limit and attach a copy of the Drink Driving Procedure Form (Screening Test) issued by the Police. 如有，請肇事司機聲明是否超出法定之酒精限度及附上警方發出的酒後駕駛程序表格副本。	☐ Yes 是 ☐ No 否
3. Has the Driver been demanded by the Police to undergo (a) a Drug Influence Recognition; (b) an Impairment Test; or, (c) a Rapid Oral Fluid Test? 肇事司機是否被警方要求進行(a) 識認藥物影響觀測；(b) 損害測試；或(c) 快速口腔液測試？ If the answer is Yes, please declare whether the aforesaid tests indicate any concentration of a specified illicit drug or other drugs was presented in the Driver's blood or urine. 如有，請肇事司機聲明是否在上述測試中顯示在其血液或尿液含有任何濃度的指明毒品或任何藥物。	☐ Yes 是 ☐ No 否

Driver's Signature 司機簽署: :_____

Name 姓名:_____

Date 日期: _____

PERSONAL DATA "個人資料"

Traffic Conviction Records Office
Central Traffic Prosecutions Division
Traffic Branch Headquarters
Hong Kong Police Force
11/F, Arsenal House
Police Headquarters
No.1 Arsenal Street
Wan Chai, Hong Kong

Business Hours :-
Monday to Friday : 9:00 a.m. to 12:45 p.m. &
2:00 p.m. to 4:30 p.m.
Saturdays, Sundays and General Holidays : Closed

Prescribed Fee : HK$61.00

For Official Use Only

Certificate S/N : _____

Payment Date : _____

Payment Receipt No. : _____

Certificate collected on : _____

Notification posted on : _____

Signature of recipient : [ ]

Date of receipt : _____

Application Form of Certificate of Previous Conviction Issued
under Section 75(5) of Road Traffic Ordinance (Cap 374) of Laws of Hong Kong

PART A Personal Particulars of Applicant

Name (in English BLOCK LETTERS) _____ (Chinese) _____

HK Identity Card No. / HK Driving Licence No. _____ Contact Telephone No. _____

Address _____

PART B

I, the above-mentioned applicant, pay the prescribed fee by ◯ **cash / Octopus / FPS** ◯ **cheque (no. _____)** and request to be provided with a certificate relating to my previous conviction of offence under Section 75(5) of Road Traffic Ordinance, Chapter 374 after the Commissioner of Police has received the prescribed fee. The record concerned includes: -

(a) Previous conviction record under Road Traffic Ordinance, Chapter 374 in the past ten years.
(b) Payment record under Fixed Penalty (Criminal Proceedings) Ordinance, Chapter 240 in the past five years.
(c1) Record of driving-offence points under Section 3(2) of Road Traffic (Driving-Offence Points) Ordinance, Chapter 375 in the past five years.
(c2) Record of taxi-driver-offence points under Section 3 of the Taxi-Driver-Offence Points Ordinance (Chapter 647) in the past five years.

PART C Declaration by Applicant

I declare that this form is completed to the best of my knowledge and belief. I certify that the information contained above is correct. I understand that if I give false information, HKPF will not be able to provide me with accurate information.

Signature of Applicant : [ ]
Date : _____

PART D Authorization (to be completed if the applicant authorizes a person to collect the Certificate)

I authorize ◯ Mr. ◯ Ms. _____ (I.D. No. _____) to collect the Certificate on my behalf.

Signature of Applicant : [ ]
Date : _____

Note :
(1) According to Section 75(5) and (5A), Road Traffic Ordinance, Chapter 374, the Certificate will only be issued to the applicant on receipt of the application made by the applicant and the prescribed fee, as well as after confirming the applicant has paid all fixed penalties, additional penalties and costs.
(2) The Certificate(s) can be collected in person or by an authorized person at our office after completion of all application procedures. If prescribed fee is paid by cash or Octopus, the Certificate(s) will be available for collection on the same day of application for one to four applications; for five to nine applications, the Certificates can be collected on the next working day after receipt of the application and on the third working day for ten or more applications. If prescribed fee is paid by cheque, the Certificate(s) will be available for collection on the sixth working days.
(3) The purpose of collecting personal particulars in this form is for processing the application, notification of application progress and record keeping purpose.
(4) Applicant has to produce his/her Hong Kong Identity Card and Hong Kong Driving Licence for verification of identity.
(5) Authorized person has to produce his/her Hong Kong Identity Card, copy of applicant's Hong Kong Identity Card and copy of applicant's Hong Kong Driving Licence for verification of identity.
(6) For protection of personal data, our staff may refuse to provide the relevant records to the applicant or the authorized person if he/she refuses to produce his/her Hong Kong Identity Card for verification.
(7) Applicant or authorized person has to submit the original application form (electronic signature is not accepted).

PERSONAL DATA "個人資料"

香港灣仔軍器廠街一號
警察總部警政大樓十一樓
香港警務處交通總部
中央交通違例檢控組
交通違例判罪紀錄室

辦公時間：
星期一至星期五：上午九時至中午十二時四十五分
及下午二時至下午四時三十分

星期六、日及公眾假期休息

費用：港幣六十一元正

只供內部填寫

證明書編號：_____

付款日期：_____

付款收據號碼：_____

證明書領取日期：_____

寄出通知書日期：_____

收件人簽署 ：

收件日期 ：_____

過往定罪事項證明書申請表格
(根據香港法例第374章《道路交通條例》第75(5)條而被定罪的證明書)

甲部 申請人個人資料

姓名（英文正楷）_____ （中文）_____

香港身份證號碼／香港駕駛執照號碼_____ 聯絡電話_____

地址_____

乙部

本人，即上述申請人，現以 ◯ **現金/八達通/轉數快** ◯ **支票** （**號碼為**_____ ）繳付申請費用，並要求警務處處長於收取訂明費用後，發出一份有關本人根據《道路交通條例》（第374章）第75(5)條而被定罪的證明書，包括：

（a） 過去十年內根據《道路交通條例》（第374章）的定罪紀錄。
（b） 過去五年內根據《定額罰款（刑事訴訟）條例》（第240章）的繳款紀錄。
（c1）過去五年內根據《道路交通（違例駕駛記分）條例》（第375章）第3(2)條的違例駕駛記分紀錄。
（c2）過去五年內根據《的士司機違例記分條例》（第647章）第3條的的士司機違例記分紀錄。

丙部 申請人聲明書

本人聲明，本人就所知及所信填寫此表格，並證明上述資料均屬正確。本人明白若提供失實資料，將會使警務處無法向本人提供準確的資料。

申請人簽署:

日期：_____

丁部 授權書（如申請人授權他人代為領取證明書）

本人授權_____ ◯ 先生 ◯ 女士（身份證號碼為 _____ ）代本人領取過往定罪事項證明書。

申請人簽署:

日期：_____

申請須知：

(1) 根據《道路交通條例》(第374章)第75(5)及(5A)的規定，本處必須收到申請人的申請及支付訂明費用後，並須確定申請人已繳交所有定額罰款、附加罰款及訟費，才可向申請人發出此證明書。
(2) 確定申請後，申請人或獲授權人可於本辦事處領取證明書。以現金或八達通繳付申請費用人士:如遞交一至四份申請，可於申請當日領取有關證明書；至於五至九份的申請，可在申請日期後的下一個工作天前來領取；而十份或以上的申請，則可在申請日期後的第三個工作天前來領取。如以支票繳付申請費用，請於確定申請後的第六個工作天領取證明書。
(3) 收集個人資料的目的為處理申請、通知申請進度及存檔之用。
(4) 申請人請出示你的香港身份證及香港駕駛執照以便核對身份。
(5) 獲授權人士請出示你的香港身份證、申請人的身分證影印本和申請人的駕駛執照影印本以便核對身份。
(6) 為保障個人私隱，如申請人或獲授權人士拒絕出示香港身份證作核對，本處可拒絕交予有關的紀錄。
(7) 申請人和獲授權人士須遞交正本申請表格(不接受電子簽署)。

Personal Information Collection Statement

Liberty International Insurance Limited (referred to hereinafter as the "Company") recognises its responsibilities in relation to the collection, holding, processing, use and/or transfer of personal data under the Personal Data (Privacy) Ordinance (Cap. 486) (the "Ordinance"). The Company will take all practicable steps to ensure the security of the Personal Data and to avoid unauthorised or accidental access, erasure, or other use.

For the purpose of this Statement, "Personal Data" means any data:

- relating directly or indirectly to a living individual
- from which it is practicable for the identity of the individual to be directly or indirectly ascertained; and
- in a form in which access to or processing of the data is practicable

The Company's products and services are intended for persons residing in Hong Kong and all payments are made in Hong Kong Dollars. The Company does not intend to or knowingly collect, hold, process, use or transfer Personal Data of any individual living within the European Union ("EU") or monitor the behaviour of any EU-based individuals.

Purpose

From time to time it is necessary for the Company to collect, or be provided by your agents and/or representatives, your Personal Data (including personal information such as but not limited to your credit, motor and health records and insurance claims history) such as Personal Data of our customers (including but not limited to our online account holders, policy owners, insureds, trustees, policy assignees, claimants, and beneficiaries) collected, transferred to or held by the Company which may be used, stored, processed, transferred or disclosed or shared by us for the following obligatory and other purposes ("Purposes"), such as:

- offering, providing and marketing to you the products/services of the Company, including related companies of the Company ("our affiliates") or our business partners (see "Direct Marketing" below), and administering, supporting, maintaining, managing and operating such products/services including policies and handling your mobile and internet accounts
- Processing and determining any insurance applications, requests, insurance claims and providing ongoing insurance services
- Processing requests for payment and for direct debit authorisation including evaluating your financial needs
- Managing, investigating and analysing any claim, action and/or proceedings made by or against or otherwise involving you, and to exercise the Company's rights as more particularly defined in the applicable policy wording, including but not limited to subrogation rights
- Compiling statistics or using for accounting purposes

- Meeting disclosure requirements of any local or foreign law, regulations, codes or guidelines binding on the Company, its parent and affiliated companies ("Liberty Mutual Group of Companies")
- Complying with the legitimate requests or orders of the courts of Hong Kong Special Administrative Region and regulators including but not limited to the Insurance Authority, Hong Kong Federation of Insurers, auditors, governmental bodies and governmental-related establishments binding the Liberty Mutual Group of Companies
- Enabling an actual or proposed assignee of the Company to evaluate the transaction intended to be the subject of the assignment
- Conducting identity and/or credit checks and/or debt collection
- Conducting medical or health reference checks for relevant insurance products
- For the management of the IT environment and business operation
- Ensuring the security of our IT environment
- Detecting and investigating illegal activity, including fraud, money laundering or terrorism financing (whether such detecting and investigating is in relation to an application or insurance policy of the Company)
- Comply with legal, regulatory and other good governance obligations, including responding to requests from public and governmental authorities (including those outside your country of residence) or to assist in law enforcement purposes, investigations by police or other government or regulatory authorities in Hong Kong or elsewhere
- For monitoring and assessing compliance with the Company and Liberty Mutual Group of Companies policies and standards
- Achieve other legitimate business purposes, for example, to carry out insurance surveys, research, and analysis, including analysis of our customer base and other individuals whose personal information we to analyse behaviour, preferences, and interests, develop new products, improve our services, identify usage trends, understand the interests of our users, to plan and execute business transactions (including joint ventures and business sales) and for other legitimate business purposes
- Establishing, exercising or defending legal rights of any member of the Liberty Mutual Group of Companies
- assisting financial institutions with interests related to you and/or the products/services you have with the Company including enabling an actual or proposed assignee/mortgagee to evaluate the transactions you have with the Company intended to be the subject of the assignment/mortgage
- to facilitate authorised service providers to provide services to the Company and/or the customers for the above Purposes
- Providing third-party administration services and carrying out other services in connection with the operation of the Company's business

- Facilitating the Company's authorised service providers to provide services to the Company and/or customers for the above purposes
- Other purposes directly relating to any of the above; and
- Any other purposes we notify you at the time of obtaining your consent

Please note that if you do not provide us with your Personal Data, we may not be able to issue your policy, process claims, or provide insurance products or services to you or process your request.

Please also ensure that you provide complete and accurate Personal Data to us and keep us updated on any changes to your Personal Data. Kindly note that if you do not provide complete and accurate personal information to us as and when it is required, it may have adverse consequences for you.

Direct Marketing
Your Personal Data collected or held by the Company, in particular, names and contact information such as telephone number, email address and postal address may be used by the Company and/or the Liberty Mutual Group of Companies to provide marketing materials and conduct direct marketing activities (including but not limited to promoting, marketing or selling of the Company, Liberty Mutual Group of Companies or co-branded insurance or financial or investment-related products or services by electronic or other means) in relation to insurance and/or financial products and services of the Company, the Liberty Mutual Group of Companies and/or other financial services providers.

This may include the use of your name, contact details, products and services portfolio information, transaction pattern and behaviour, financial background and demographic data held by the Company from time to time for direct marketing and to conduct direct marketing (including but not limited to providing reward, loyalty or privileges programmes of products and services that the Company, our affiliates, Liberty Mutual Group of Companies, our co-branding partners and our business partners may offer.
If you do not consent to receive such marketing communications, you may at any time withdraw your consent to the use and provision of your Personal Data for direct marketing by downloading the form below.
https://www.libertyinsurance.com.hk/sites/libertyhk/files/documents/Opt_Out_Form/Opt_Out_Form.pdf

In the absence of any "opt-out" request from the customer, the Company shall treat the application and continuation of his/her policy(ies) held with the Company as an indication of no objection to the Company's use of such Personal Data for this voluntary marketing purpose.

Transfer of Personal Data
Your Personal Data will be kept confidential and may be held or stored locally, regionally, or globally, whether in Hong Kong or out of Hong Kong.

Subject to the provisions of any applicable law, we may need to disclose your Personal Data to third parties, whether located within or outside Hong Kong for one or more of the above Purposes.

Your Personal Data may be made available to:

- **Our Liberty Mutual Group of Companies:** Other Liberty Mutual affiliates may have access to and use of Personal Data in connection with the conduct of our business where appropriate in order to fulfill one or more of the above Purposes.
- **Our Liberty Mutual Group of Companies,** or any other company carrying on insurance or reinsurance related business, or an intermediary
- **Our Service Providers:** External third-party service providers such as but not limited to agent, contractor, banker or third-party service provider who provides administrative, telecommunications, computer, payment, banking or other services to the Company in connection with the operation of its business and Liberty Mutual affiliates in a service provider role, such as accountants, auditors, lawyers and other outside professional advisors; call-center service providers; IT systems and management, IT support and security service providers; cloud providers, research and analytics service providers; claim investigators and adjusters; and similar third-party service providers that assist us in carrying out business activities
- **Other Third-Parties Service Providers** including brokers; employers; healthcare professionals; hospitals; organisations that consolidate claims and underwriting information for the insurance industry; fraud prevention organisations; other insurance companies (whether directly or through fraud prevention organisation or others named herein), the police and databases or registers (and their operators) used by the insurance industry to analyse and check information provided against existing information; legal advisors, investigators, loss adjusters, reinsurers, medical and rehabilitation consultants, emergency assistance companies, medical doctor panel groups, medical advisory consultants, surveyors, specialists, repairers, accountants, financial institutions, and data processors including any interested parties with legitimate legal and/or beneficial interests in your policies, the subject matter of your policies, and/or the products/services you have with the Company
- **Other Third-Parties:** To a third-party in the event of any reorganisation, merger, sale, joint venture, assignment, transfer or other disposition of all or any portion of our business, assets or stock (including in connection with any bankruptcy or similar proceedings); to reinsurance companies
- Credit reference agencies, financial institutions, and in the event of default, any debt collection agencies or companies carrying on claim or investigation services
- Any person to whom the Company is under an obligation to make disclosure under the requirements of any law binding on the Company or any of its associated companies for the purposes of any regulations, codes or guidelines issued by governmental, regulatory or other authorities with which the Company or any of its associated companies are expected to comply
- Any person pursuant to any order of a court of competent jurisdiction
- Any actual or proposed assignee of the Liberty Mutual Group of Companies or transferee of the Liberty Mutual Group of Companies' rights in respect of the policy owners

- Supplied to the Data Center of Liberty Mutual Group of Companies or Liberty Mutual Group of Companies in the USA may host such respective servers or may utilise third-party servers which Liberty Mutual Group of Companies would be the controller for processing, storage, and/or backup of Personal Data. Such Data Centers and/or servers are/may be located in Singapore, elsewhere in Asia, the United States of America, Europe, and Latin America or such other countries/territories as determined by the Liberty Mutual Group of Companies from time to time
- Providers of risk intelligence for the purpose of customer due diligence or anti-money laundering screening
- Other banking/financial institutions, commercial or charitable organisations with whom the Company maintains business referral or other arrangements for marketing communication if "no objection" is provided
- Third-party marketing service providers and insurance intermediaries for marketing communication if "no objection" is provided.
- Made available to any actual or proposed purchaser of Company business or, in the case of a merger, acquisition or other public offerings, the purchaser or subscriber for shares in Liberty Mutual Group of Companies
- Supplied to an organisation involved in maintaining, reviewing and developing our business systems, procedures, and infrastructure including testing or upgrading our computer systems
- Provided to your representatives including your legal advisers
- Made available to anyone to whom you have given your consent
- Made available to other Company's authorised service providers to provide services to you for the above purposes for which the Personal Data are to be used
- As we believe to be necessary or appropriate: To comply with legal process, to respond to requests from public and government authorities including public and government authorities outside your country of residence, to enforce our terms and conditions, to protect our operations, to protect our rights, privacy, safety or property, and/or that of you or others; to detect and prevent fraud, and to allow us to pursue available remedies or limit the damages that we may sustain

Data Processing Outside Hong Kong

We may share Personal Data with one or more of our affiliated Liberty Mutual Group Companies, service providers, or with third parties for the Purposes described above. Some of these affiliated companies, service providers, and third parties may be based in other countries and may not be subject to the laws of Hong Kong.

By sharing personal information with the Company, you consent to the collection, use, processing, and transfer of such information in accordance with our Privacy Policy to the United States (where the Company's headquarter is located) or other countries. We will take all steps reasonably necessary to ensure that your Personal Data is treated securely and in accordance with our Privacy Policy. However, you should note that where your Personal Data is disclosed to or accessed by parties located outside of Hong Kong as provided above, your

personal information may not be afforded the same protections as it is under Hong Kong law.

Access and Correction of Personal Data
According to the Ordinance, you have the right to ascertain whether the Company holds your Personal Data, to access, obtain, correct and/or change any of your Personal Data held by the Company by contacting the Company's Personal Data Privacy Officer. Requests for access and correction or for information regarding policies and practices and kinds of data held by the Company should be addressed in writing to:

Data Privacy Officer
Liberty International Insurance Limited
Suites 2601-04 & 2607-16, 26/F,
1111 King's Road,
Taikoo Shing, Hong Kong

using the Data Access Request Form found at:
https://www.pcpd.org.hk/english/publications/files/Dforme.pdf

In accordance with the Ordinance, a reasonable fee may be charged by the Company to offset the Company's administrative and actual costs incurred in complying with your data access requests.

In the event of any discrepancy or inconsistencies between the English and Chinese versions of this notice, the English version shall prevail.

個人資料收集聲明

利寶國際保險有限公司（以下簡稱『本公司』）根據『個人資料（私隱）條例』（香港法例第 486 章）（以下簡稱『條例』）就收集、持有、處理，使用和/或轉移個人資料承擔有關責任。本公司將採取一切可行措施以確保個人資料安全，避免未經授權或意外存取、刪除或其他用途。

就本聲明而言，「個人資料」是指符合以下說明的任何資料：

- 直接或間接與一名在世人士有關的
- 從該資料直接或間接地確定有關的個人的身份是切實可行的；及
- 該資料的存在形式令予以查閱及處理均是切實可行

本公司產品及服務擬向居於香港者提供，且所有款項均以港元支付。本公司不擬亦不會明知而收集 、持有、處理、使用或傳輸任何居於歐盟人士的個人資料或監察任何歐盟個人的行為。

目的

本公司不時有必要收集由你或你的代理和/ 或代表而得來的個人資料（包括但不限於你的信貸、汽車和健康紀錄和索償紀錄），例如，本公司可能就以下強制或其他目的（「目的」）使用 、儲存、處理、傳輸、披露或分享所收集或持有的客戶（包括但不限於網上帳戶持有人、保單擁有 人、受保人、受託人、保單承讓人、索償人及受益人）個人資料，例如：

- 向你建議、提供及推銷本公司（包括本公司相關公司（「本公司聯屬公司」）或商業夥伴） 產品/服務（請參閱下文「直接營銷」）、行政管理、支援、維持、管理及經營該等產品/服務 （包括保單）、處理你的流動及互聯網帳戶
- 處理和確定任何保險申請書、要求、保險索償及持續提供保險服務
- 處理付款事宜和直接付款授權書
- 管理、調查和分析任何索償事宜、訴訟和/或針對客戶的訴訟，以及行使本公司根據保險條款賦予的權利，包括但不限於代位權
- 從事統計資料或用於會計事務
- 履行任何對本公司、母公司和附屬公司（『利寶互助保險集團公司』）具有約束力的本地或海外法律、法規、守則或指引之披露要求

- 遵守香港特別行政區的法院命令和包括但不限於保監處，香港保險業聯會，核數師，政府機構和政府成立之相關監管機構對利寶互助保險集團公司具有約束力的合法要求
- 協助本公司的實質或建議承讓人能夠評核擬進行涉及有關轉讓的交易
- 從事核實身份和/ 或信貸審查和/ 或追收債務
- 為相關保險產品進行具參考用途之醫療或健康調查
- 資訊科技管理及商業營運
- 保障資訊科技的安全
- 偵察及調查非法活動，包括欺詐，洗黑錢及與恐怖主義有關的經濟活動（不論該偵察及調查是否與本公司的申請或保單有關）
- 遵從法定、監管以及其他良好管治義務，包括回應由公營及政府機構的要求（包括你居住以外 的國家），或協助香港或其他地方的警察或其他政府或監管機構為執法而調查
- 協助本公司和利寶互助保險集團之公司政策及其標准監察及評估違規事宜
- 實現其他合法的商業目的，例如開展保險調查，研究和分析，包括分析本公司的客戶群和其他個人資料，分析他們的行為，偏好和興趣，開發新產品，改進本公司的服務，識別客戶使用 趨勢，了解本公司客戶的利益，計劃和執行商業交易（包括合資企業和業務銷售） 以及其他合法商業目的
- 建立、行使或維護任何利寶互助保險集團公司成員的法律權利
- 協助擁有與你相關權益及/或於你所持本公司產品/服務中擁有權益的金融機構，包括於你與本公司之間交易擬用作轉讓/按揭標的時，使實際或擬定承讓人/承按人得以評估該等交易
- 促使獲授權服務供應商就上述目的向本公司及/或客戶提供服務
- 提供第三方管理服務，並執行其他與本公司經營業務有關的服務
- 促進協助利寶互助保險公司的全球性配合，溝通和團隊合作
- 直接涉及任何上述的其他目的；及
- 當獲得閣下同意時提及的任何其他目的

如閣下不向我們提供個人資料，我們未必能夠簽訂保單、處理索償、提供保險產品、服務或處理你的要求。

請確保你向本公司提供完整準確的個人資料，並隨時更新你個人資料的任何變更。請注意，如果你在需要時不向本公司提供完整和準確的個人資料，可能會對你造成不良後果。

直接營銷

本公司所收集或持有的客戶個人資料，特別是姓名和聯繫資料，如電話號碼、電子郵件地址和郵 政地址，可能會用以提供本公司和/或利寶互助保險集團的公司的營銷材料，並進行有關本公司、 利寶互助保險集團公司的保險及/或金融產品及服務和/或其他金融服務供應商的直接營銷活動 （包括但不限於通過電子或其他手段促銷，推廣或銷售本公司、利寶互助保險集團公司或聯營公司有關保險或財務或投資產品或服務）。

此或包括使用你的姓名、聯絡資料、產品及服務組合資料、交易模式及行為、財務背景及本公司所持有的人口資料作直接營銷及執行直接營銷（包括但不限於本公司、本公司聯屬公司、利寶互助保險集團的公司、合作品牌夥伴及業務夥伴所提供產品及服務的回贈、長期客戶或專享計劃）。

若你不同意收取上述營銷通訊，可隨時透過下載以下表格撤回對使用、提供你個人資料作直接營銷之用的同意。或者你可以
在 https://www.libertyinsurance.com.hk/sites/libertyhk/files/documents/Opt_Out_Form/Opt_Out_Form.pdf 下載「拒絕接受直銷推廣表格」。

如保客戶沒有“選擇退出”的要求，本公司持有之保單持續生效將被視為不反對本公司將其個人資料 使用於此自願性的營銷目的。

個人資料的轉移

本公司所持有的個人資料將予以保密，並可能會本地、區域或全球性地保留或存儲。

根據任何適用的法律條例，本公司可能根據一種或多種上述的目的需要向香港境內或境外的第三方透露閣下提供/ 披露的個人資料。

你的個人資料可能會提供給：

- 其他利寶互助公司 ：其他利寶互助附屬公司可能會在適當的情況下取得和使用與本公司的業務相關的個人資料，以實現上述一項或多項目的
- 任何利寶互助保險集團公司，或任何其他從事與保險或再保險業務有關的公司，或中介人
- 我們的服務供應商：任何向本公司提供行政、電訊、電腦、付款、銀行或其他與業務運作有關服務，包括但不限於向本公司的代理人、承包人、銀行家及第三方服務供應商，與本公司業務營運及利寶互助附屬公司提供服務的角色，例如會計師、審計師、律師及其他外部專業顧問、電話客務中心服務、電腦系統和管理，電腦技術支援和保安服務、雲端、研究和分析服務供應商，辦理索償理賠或調查服務和公証行，以及協助我們展開商業活動的第三方服務 提供商
- 其他第三方服務供應商包括保險經紀；僱主；醫護專業人士；醫院；整合保險業申索和承保資料的組織；防欺詐組織；其他保險公司（無論是直接地，或是通過防欺詐組織或本段中指名的其他人士）；警察；和保險業就現有資料而對所提供的資料作出分析和檢查的數據庫或登記冊（及其運營者）；法律顧問、調查員、損失理算師、再保險公司、醫療及康復顧問 、緊急援助公司、網絡醫生集團、醫療諮詢顧問、測計員、專家、維修人員、會計師、金融機構及數據處理員（包括任何於你保單、保單標的及/或所持本公司產品/服務中擁有合法法定及/ 或實益權益者）
- 其他第三方： 對於任何重組，合併，出售，合資，委托，轉讓或其他處置的全部或任何部分的情況下的第三方業務，資產或股票（包括任何破產或類似訴訟）；再保險公司
- 信貸資料服務機構，在違約情況下，任何債務追收機構或辦理索償理賠或調查服務公司
- 本公司或任何聯營公司在遵守由政府，監管機構或其他當權者推行的法規、守則或指引及履行法律責任時需要向其披露之任何人士
- 根據有司法管轄權的法院命令受權之任何人士
- 利寶互助保險集團公司的實質或建議受讓人或利寶互助保險集團公司與保單持有人相關權利的承讓人
- 提供給美國利寶互助保險集團公司或利寶互助保險集團公司的數據中心可以託管相應的服務器，或者可以利用利寶互助保險集團公司將成為處理，存儲和/ 或備份的控制器

的第三方服務器個人資料。這些數據中心和/或服務器可能位於新加坡，亞洲其他地區、美國、 歐洲和拉丁美洲或由利寶互助保險集團公司集團公司確定的其他國家/ 地區

- 為客戶盡職調查或打擊清洗黑錢的篩選之風險智能供應商
- 如保客戶沒有 “選擇退出” 的要求，與本公司保持業務轉介或其他安排上之其他銀行 / 金融機構 、商業或慈善組織作為直銷通訊用途
- 第三方營銷服務供應商和保險中介機構作為直銷通訊用途
- 任何實際或建議購買者提供給公司業務，在合併，收購或其他公開發行的情況下，購買者或認購者為利寶互助保險集團公司的股份
- 提供給參與維護，審查和開發本公司的業務系統，程序和基礎設施的組織，包括測試或電腦升級系統
- 提供你的代表，包括你的法律顧問
- 提供給已獲得你同意的人
- 提供獲其他公司受權的服務供應商，在需使用個人資料向你提供有關上述項目之服務
- 本公司認為必要或適當的: 遵守法律程序，回應公共和政府機構（包括居住國以外的公共和政府機構）的要求，執行我們的細則及條款，保護本公司的業務營運，及保護本公司的權利， 私隱，安全或財產，以及/ 或你或他人的; 偵察和防止欺詐行為；並允許本公司補救措施或限制本公司可能遭受的損害

香港以外的資料處理

本公司可能會與本公司的一家或多家聯屬利寶互助保險集團公司，服務供應商或第三方共享個人資料，以達到本公司隱私政策中所述的目的。其中一些附屬公司，服務供應商和可能位於其他國家的第三方，可能不受香港法律的約束。

通過與公司分享個人資料，你同意根據我們的隱私政策向美國（公司總部所在地）或其他國家收集，使用，處理和轉讓此類資料。我們將採取一切合理必要的措施，確保你的個人資料得到安全處理，並符合我們的私隱政策。請注意如果你的個人資料於香港以外的單位取得或使用，你的個人資料可能不會獲得與香港法律相等的保護。

查閱及更正個人資料

根據條例，你有權聯絡本公司個人資料私隱主任，以查證本公司是否持有你的個人資料，存取、獲得、更正及/或修改本公司所持有關於你的個人資料。如要求查閱、更正資料或索取有關本公司政策及慣例、所持資料類別的資訊，應以書面方式向以下收件人提出：

資料私隱主任
利寶國際保險有限公司
香港太古城英皇道 1111 號 26 樓 2601-04 及 07-16 室

你可在以下網址下載查閱資料要求表格： https://www.pcpd.org.hk/tc_chi/resources_centre/publications/forms/files/Dformc.pdf

根據條例的規定，本公司在處理個人資料查閱申請時可向客戶收取合理的費用。

如中、英文版本有任何歧義或不相符之處，概以英文版本為準。